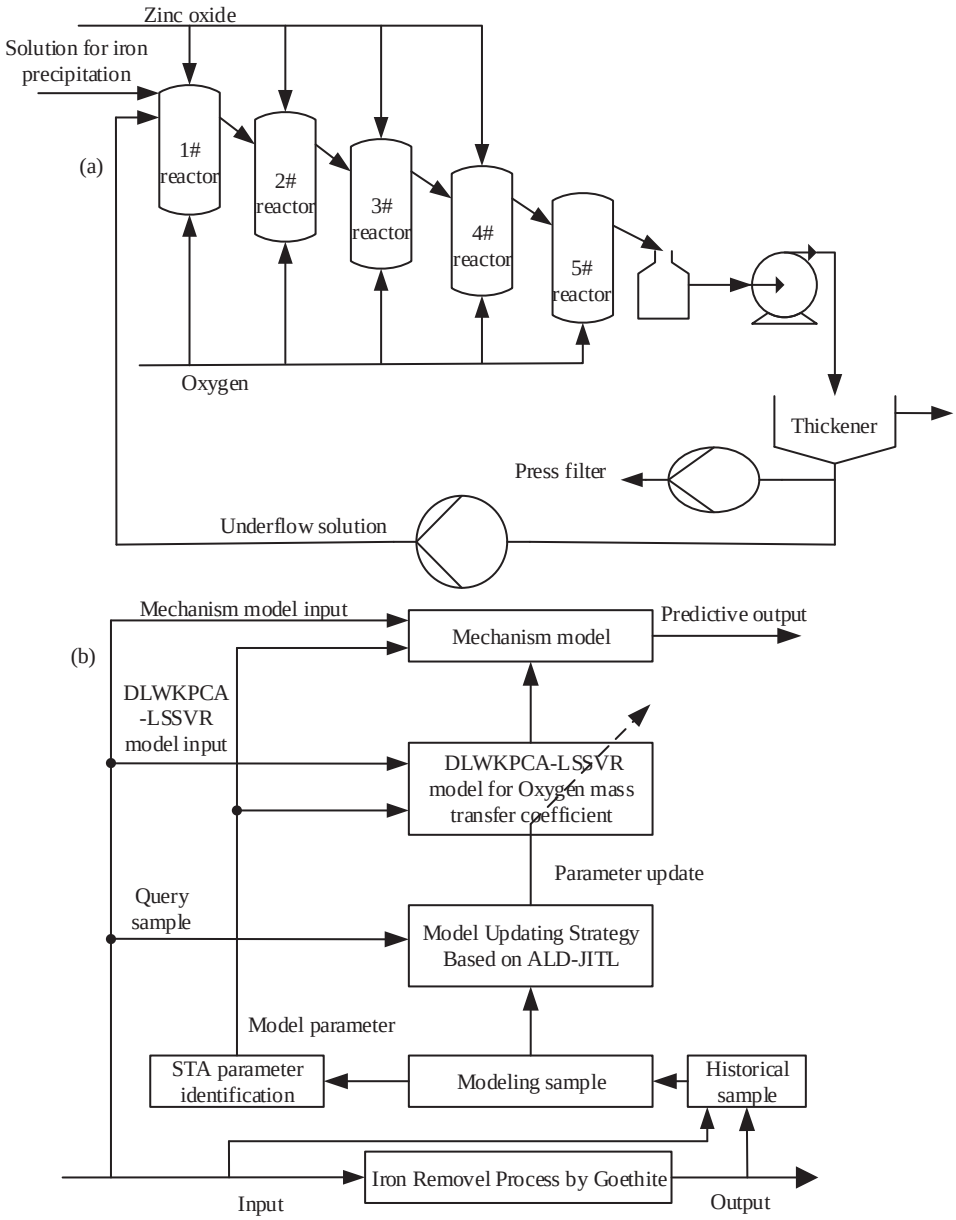
Zinc oxide
Solution for iron precipitation
(a)
1# reactor
2# reactor
3# reactor
4# reactor
5# reactor
Oxygen
Thickener
Press filter
Underflow solution
Mechanism model input
Mechanism model
Predictive output
(b)
DLWKPCA -LSSVR model input
DLWKPCA-LSSVR model for Oxygen mass transfer coefficient
Parameter update
Query sample
Model Updating Strategy Based on ALD-JITL
Model parameter
STA parameter identification
Modeling sample
Historical sample
Iron Removel Process by Goethite
Input
Output

Figure S1